P-08 TUE-03

Team Concrete Birthday

Khyati Singh
23B1220

S.Monica
23B1243

Khushi Chandak
23B3920

Rahul Kumar
23B1212

Arnav Ramteke
23B1281

GUIDE: Prof. Siddharth Tallur

EE344: EDL

Feedback Received & Action Taken

Feedback Received	Action Taken
Testing procedure wasn't clear	We finalised our experimental procedure, starting from hot water and moving on to the concrete. We have started the concrete work.
Receiver logic and BLE connectivity needed better definition and time scheme	Takes reading every 10 min, BLE advertises 15 seconds every 3 minutes with 30 packets transmitted every 3 minutes.
Our timeline is too slow, for testing results	Speed up PCB process, and the flash integration, did hot water testing and doing Concrete testing.
Hardware casing to be finalised	A 3D CAD-designed enclosure for the main PCB and battery, along with a metallic casing for the temperature sensor.

POC- Demo

Video Link:

https://drive.google.com/drive/folders/1yGoUWSWZA1DktC4q-Uvuw7caT88dwtVf?usp=sharing

The temp sensor values are taken every minute (for demo purposes, our final prototype will have a different time scheme). The MCU calculates the Maturity Index; the values are stored in Flash, which is then transmitted through BLE to the Phone app.

The testing was conducted in three parts:

1. The temperature sensor's performance at **high temperatures** was evaluated using a soldering machine blower, measuring the temperature from 40°C to 110°C.
2. In the second phase, **low-temperature** performance was tested using ice and cold water, reaching temperatures close to 0°C.
3. The **BLE communication range** was assessed by embedding the entire apparatus in cement up to a height of 15 cm. Reliable communication was observed up to 8–9 cm, with the maturity index successfully displayed on the mobile app.

PCB Status

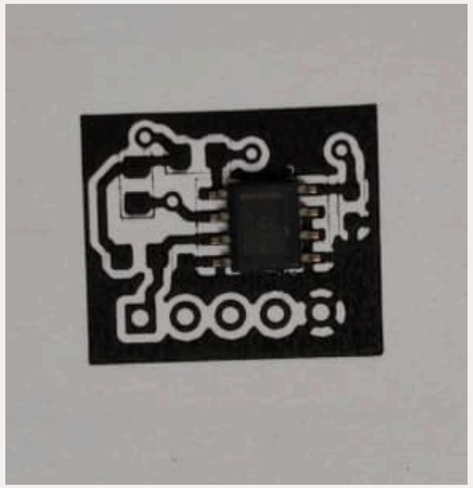

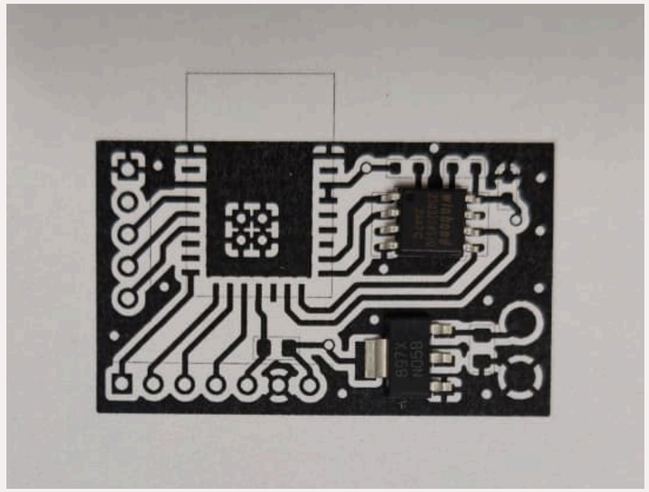

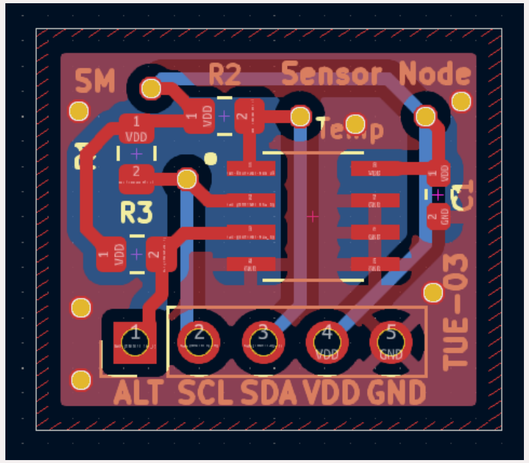

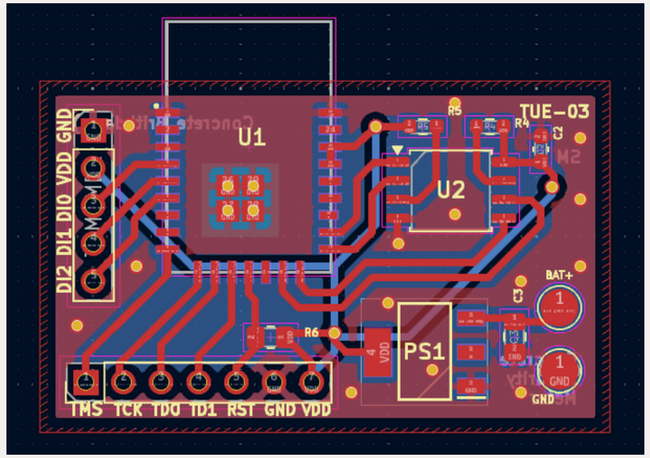

PCB design has been reviewed and verified, and the boards have been sent for fabrication. All designs have been checked for schematic accuracy, layout integrity, and manufacturability before submission.

Two PCBs have been designed:

1. Sensor Node PCB: A 2-layer board including the temperature sensor (TMP1075).
2. Main Board PCB: A 2-layer board housing the MCU with BLE, LDO for power regulation, power input circuitry, and external flash memory, along with required decoupling capacitors and pull up resistors.

Prototype Assembly Stage : Hardware

For testing, the temperature sensor was housed in a metallic circular enclosure filled with thermal paste, while the main PCB components and battery were sealed in a zip-lock bag before conducting the experiment.

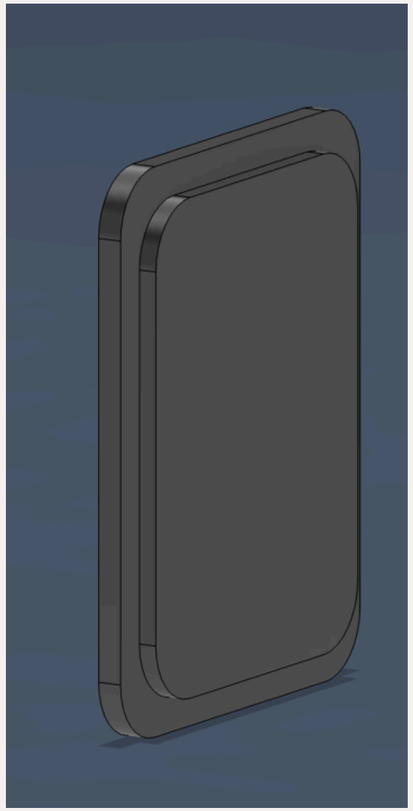

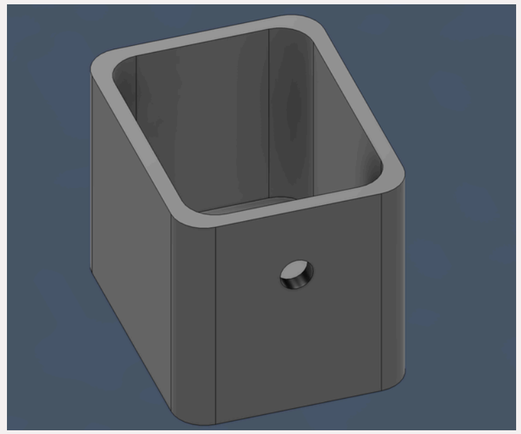

For the final demo, we will follow the same approach for the temperature sensor by housing it in a metallic enclosure with thermal paste. The main PCB and battery will be placed in a zip-lock bag and enclosed within a 3D-printed box of dimensions 4.5 × 3.5 × 3.5 cm. These will be connected to the daughter PCB using a 5-core twisted-pair shielded cable. The entire assembly will be secured by sealing the top lid and the connector interface with epoxy.

Work Pending + Key risks

Work Pending -

1. Casting of the concrete block with the embedded sensor and system testing.
2. 3D printing of the hardware casing for main PCB.
3. Procurement of the maturity curve for the required concrete grade from the SEMT Lab (based on previously conducted compression tests).

Key Risks -

1. Reliable BLE signal transmission through an actual concrete block.
2. Accurate in-situ testing and proper fitting of the maturity curve from collected data.
3. Durable hardware casing for the main PCB and daughter PCB.
4. Final PCB soldering and overall system verification.

Gantt Chart Progress

GANTT CHART (Concrete Maturity Meter)

PROJECT TITLE	Concrete Maturity Meter	COMPANY NAME	IIT BOMBAY
GUIDE	Prof. Siddharth Tallur	DATE	2/19/26

S. NO.	TASK TITLE	TASK OWNER	% OF TASK COMPLETE
1	**Project Conception and Initiation**		
1.1	System Architecture	Monica	100%
1.2	Block Diagram	Khushi	100%
1.3	Documentation	Khyati	40%
1.4	Initial Calculations	Khyati	100%
1.5	Initial Research	Rahul	100%
1.6	Methodology Finalization	Khushi	80%
2	**Project Definition and Planning**		
2.1	Specifications and Scope	Monica	100%
2.2	Power Budgeting	Khushi	100%
2.3	Component Selection	Monica	100%
2.4	Material Selection	Khyati	50%
2.5	Mechanical Design	Khyati	50%
2.6	PCB Schematic	Monica	70%
3	**Project Implementation and Testing**		
3.1	MCU Configurations	Arnav	70%
3.2	BLE Tx Rx Testing	Rahul	60%
3.3	Circuit Validation	Monica	0%
3.4	PCB Fabrication	Monica	0%
3.5	Mechanical Assembly	Khyati	0%
4	**Project Demo**		
4.1	System Validation	Team	0%
4.2	Submerge Tests	Team	0%
4.3	Dry Concrete Tests	Team	0%
4.4	Final Demo	Team	0%

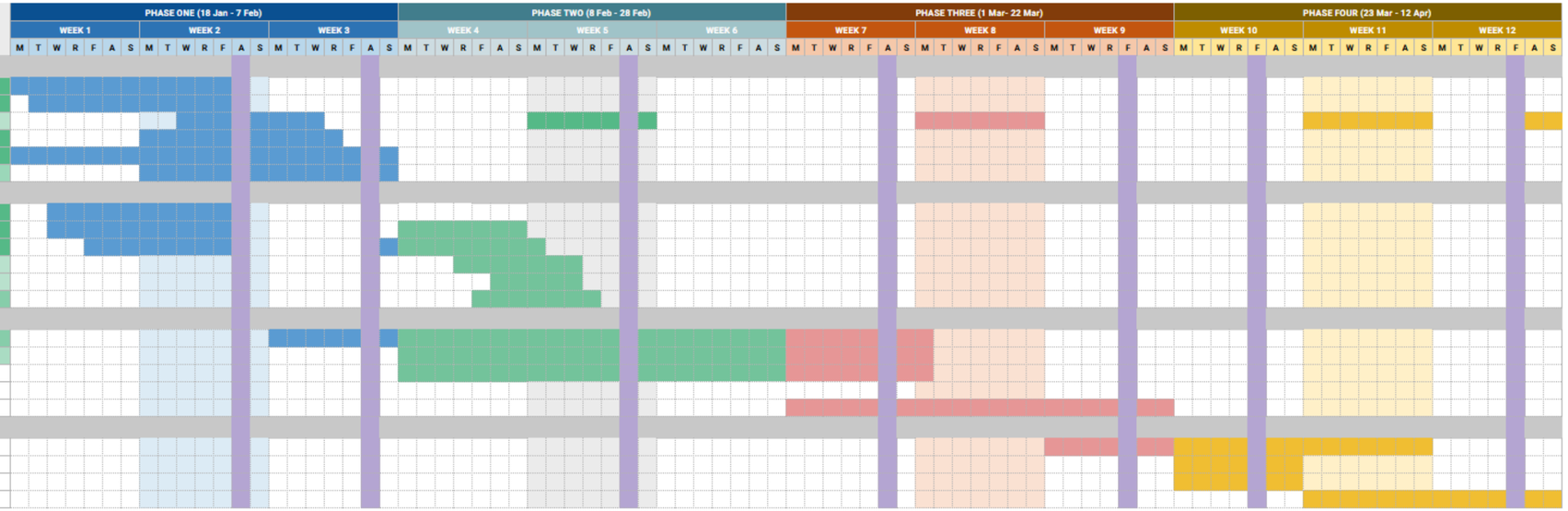

- No deviations from the original plan
- Concrete testing is to be started.

Work distribution

Member	Work assigned
Monica S	PCB + System Testing + Documentation
Khushi Chandak	Concrete Testing + Methodology Validation
Khyati Singh	Hardware Casing + Testing Integrity
Rahul Kumar	Circuit Integration + BLE Strength testing
Arnav Ramteke	Concrete Slab making + Testing

Work responsibilities have been clearly assigned. Progress was documented every three days, and communication was maintained primarily through offline meetings, WhatsApp group and Discord.

Plan for Final Demo

1. For the final demo, we plan to cast a concrete block in the SEMT Lab of the Civil Engineering Department, embedding our complete device (temperature sensor, main PCB, and battery) within the block.
2. The system will be monitored over a period of two weeks, with temperature vs time data recorded on a daily basis.
3. Using the collected temperature–time data, we will generate a maturity curve and compare it with the standard curve for M30 grade concrete, obtained from prior compression testing data available in the SEMT Lab. This comparison will help validate the accuracy and reliability of our maturity meter.
4. During the demo, we will showcase the real-time operation of the device, including BLE-based data transmission, through which the computed maturity value—representing the final strength of the concrete at that time—will be received on the mobile application. We will also evaluate the effective communication range through concrete.

THANK YOU